rev.	revision text	rev date	rev by	apr. date	apr. by
02	general specification	2023-02-16	RaSaid	2023-02-16	McNaeb
03	center marks changed	2023-03-08	LaSilva	2023-03-10	McNaeb
04	diameter increased, hole pattern added	2023-10-01	McNaeb	2023-10-01	McNaeb

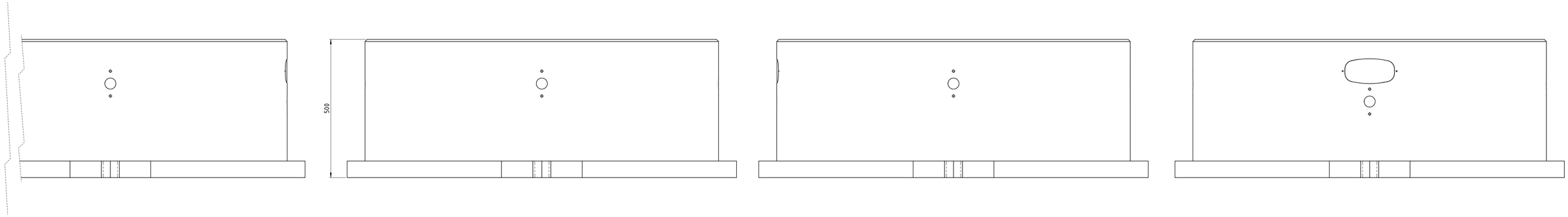

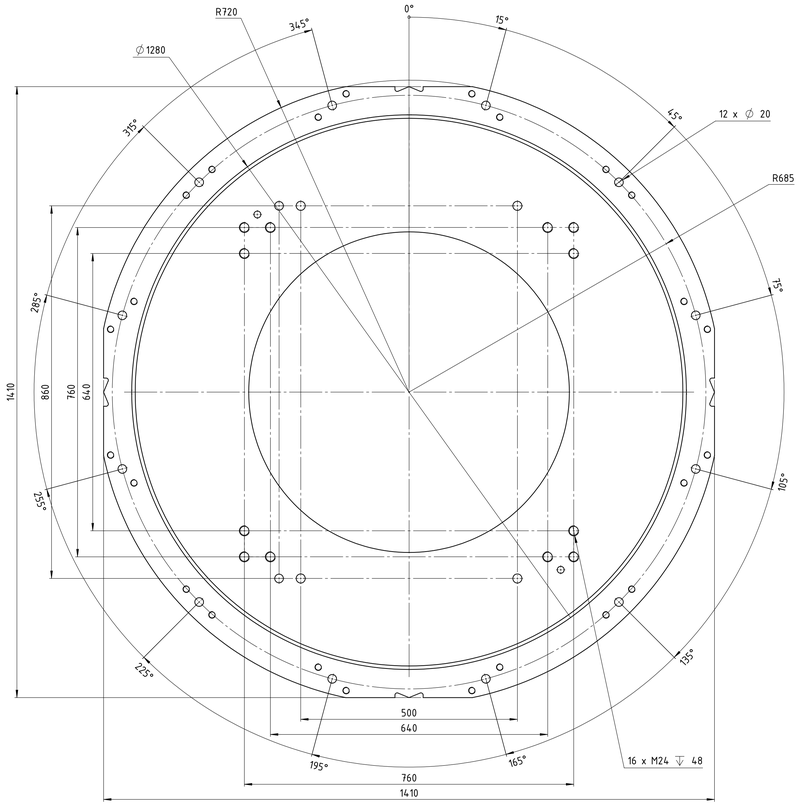

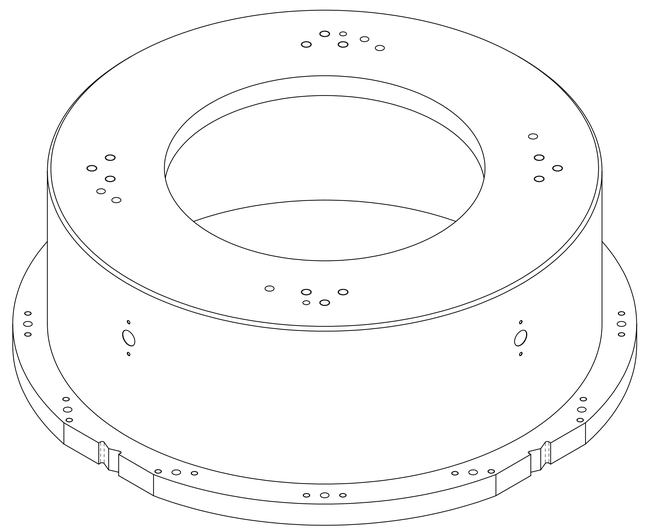

The reproduction, distribution and utilization of this document as well as the communication of its contents to others without express authorization is prohibited. Offenders will be held liable for the payment of damages. All rights reserved in the event of the grant of a patent, utility model or design.

where nothing else is indicated tolerances: DIN ISO 2768-mH welding: DIN EN ISO 13920-A no sharp edges	status: Released SAP EMEA no:	SAP AM no: 230794	YASKAWA www.yaskawa.eu.com	dimension: 1410x1410x500 mm created: 2023-07-19 drawn: 2023-07-19 approved: 2023-07-19	weight: 598.603 kg McNaeb McNaeb RaSaid
	title / description: robot stand T-500			drawing-no: 0001060821-100	revision: 04
					sheet: A0 1.5 4/5